TUBING & CASING GAGES

Tubing & Casing Inspection System Solutions

Basic Tubing Solution

TBP-200

2 ⅜" - 4 ½" EUE, 2 ⅞" - 4 ½" NUE

Solution Includes:

- Ovality & pitch diameter gage (MRP Series)
- MRP pin rod standard*
- MRP box rod standard*
- Internal thread height gage
- External thread height gage
- Thread height standard
- Thread addendum gage
- Thread addendum standard
- Lead gage
- Lead gage standard
- Internal taper gage
- External taper gage
- Thread profile
- TDWIN Taper software
- All necessary contact points

Solution package includes one pin and one box standard for one connection size. Standards for additional connection sizes are available at package price.

Tubing Add-on Solutions

1.66" - 1.90" EUE
1.66" - 2⅜" NUE

TBP-200-1A Add-On

- 1 MRP pin rod standard*
- 1 MRP box rod standard*
- TH-3012
- TP-RTC-10R profile
- Required contact points

1.05" - 1.315" EUE
1.05" - 1.315" NUE

TBP-200-2A Add-On

- MRP-202
- 1 MRP pin rod standard*
- 1 MRP box rod standard*
- TH-3012
- SPG-6000 with contact point arms
- TP-RTC-10R profile
- Required contact points

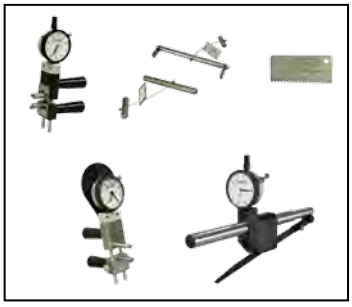

For connection packages other than the base packages, please contact Gagemaker directly. However, if you order the basic solution and want more connections, you simply need to add one of the Tubing Add-on or Casing Add-on solutions*.

**Add-on solutions include one pin and one box standard for one connection size. Standards for additional connection sizes are available at package price.*

2⅜" - 4½" USS Buttress

TBP-200-3A Add-On

- BR-2001-USS
- 1 MRP pin rod standard*
- 1 MRP box rod standard*
- TH-3004-USS
- TH-3002-USS
- THS-USS
- TP-USS-8P Profile
- Required contact points

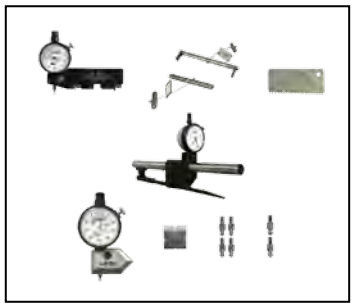

Basic Casing Solution

CBP-300

4 ½" - 8 ⅝" LTC/STC

Solution Includes:

- Ovality & pitch diameter gage (MRP Series)
- MRP pin rod standard*
- MRP box rod standard*
- Internal thread height gage
- External thread height gage
- Thread height standard
- Thread addendum gage
- Thread addendum standard
- Lead gage
- Lead gage standard
- Internal taper gage
- External taper gage
- Thread profile
- TDWIN Taper software
- All necessary contact points

Solution package includes one pin and one box standard for one connection size. Standards for additional connection sizes are available at package price.

Casing Add-on Solutions

9⅝" - 20" STC/LTC

CBP-300-1A Add-On

- ET-7004
- ET-7006
- IT-6001 and extension rods,
- 1 MRP pin rod standard*
- 1 MRP box rod standard*
- Required contact points

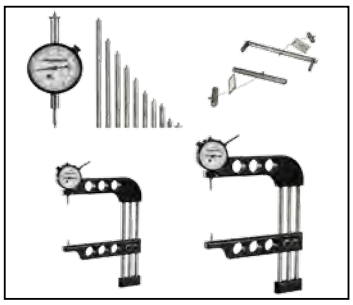

4½" - 8⅝" Buttress

CBP-300-2A Add-On

- 1 MRP pin rod standard*
- 1 MRP box rod standard*
- TH-3002B
- 1017 standard
- LS-1005
- BR-2001
- TP-5BTC75-EXT
- TP-5BTC75-INT
- Required contact points

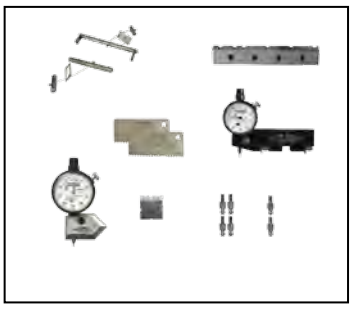

9⅝" - 13⅜" Buttress

CBP-300-3A Add-On

- ET-7004
- IT-6001 and extension rods
- 1 MRP pin rod standard*
- 1 MRP box rod standard*
- TH-3002B
- 1017 standard
- LS-1005
- BR-2001
- TP-5BTC75-INT Profile
- TP-5BTC75-EXT Profile
- Required Contact Points

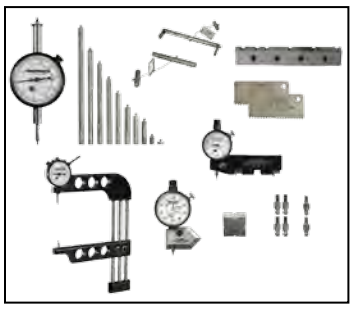

16" - 20" Buttress

CBP-300-4A Add-On

- ET-7006
- IT-6001 and extension rods
- 1 MRP pin rod standard*
- 1 MRP box rod standard*
- TH-3003
- 1018 standard
- LS-1006
- BR-2001
- TP-5BTC1-INT and
- TP-5BTC1-EXT
- Required Contact Points

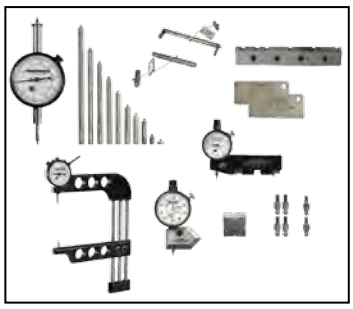

Tubing & Casing Thread Inspection System

Gagemaker's Tubing & Casing Thread Inspection System takes the guesswork out of inspecting tubing and casing. The Gagemaker's Tubing and Casing Thread Inspection Gages inspect all required thread elements - *Thread Form, Ovality, Crest Diameter, Thread Lead, Thread Height,* and *Thread Taper* – all with the precise accuracy required in today's demanding industry.

TDWIN TAPER
THREAD DISK for TAPERED THREADS

Inspection Setup & Tolerances

Thread Form

Thread Lead

Crest Diameter and Ovality

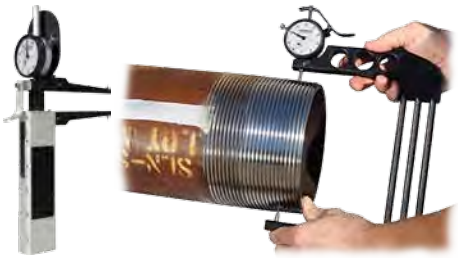

Thread Taper

Thread Height

Inspection Setup and Tolerances

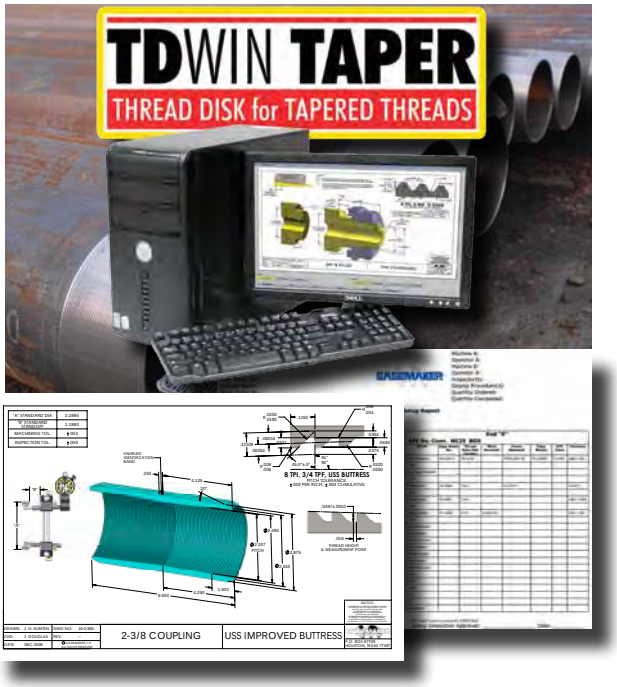

TDWIN Taper is the perfect accessory to Gagemaker's Tubing and Casing API Inspection Gages. It's the only software program dedicated to the manufacturing and inspection of downhole tubular connections. **TD**WIN Taper relies on API and industry standard tables and tolerances. It has everything you need to machine, inspect, and document tubular connection threads. **TD**WIN Taper displays connection drawings, inspection gage information, and setup and inspection reports. It is a must have for any machine shop.

- *Print dimensional reports and inspection sheets*
- *Print product blueprints for manufacturing and inspection*
- *View gage configurations, setting standards, and contact point information*

The program includes the following tapered connections:

Tubing and Casing Connections

NUE Tubing
EUE Tubing
Short Thread Casing
Long Thread Casing
Buttress Casing

USS Improved Buttress Tubing
Line Pipe
Special Clearance Couplings
SR13 Seal Ring Groove Couplings

Rotary Shouldered Connections

API Numbered Connections - NC
API Regular - REG
Full Hole - FH
Internal Flush - IF
Open Hole - OH

PAC
Slim Hole - SH
Wide Open - WO
Xtra Hole - XH
Hughes 90 - H-90

Slimline H-90 - SL H-90
External Flush - EF
Acme Regular - AR
Acme Streamline AS
Double Streamline - DSL

System Requirements

- *Microsoft Windows XP or newer*
- *USB 2.0 port*
- *Internet Connection for first use*
- *1 MB RAM or more (recommended)*
- *Screen resolution of 1024 X 768 minimum*
- *.Net Framework 2.0 or later installed*

Model	Description
TDWIN-Taper	Thread Disk Software for Tapered Threads
TDWIN-Taper-Network	Multi-user license agreement

Thread Form Inspection

Correct thread form is important for a pipe end and coupling to make up properly. Doing a quick check using a Gagemaker thread profile verifies the thread form is correct.

Profile gages can also be used to perform a visual inspection of a thread form for detecting chipped inserts, steps, flat crested threads, stretched threads, wide first threads, or rolled over threads.

TP-RTC-8R

Thread Form Profiles

Gagemaker manufactures precision tapered thread profile gages for the quick identification of product thread forms. Specify the connection which is to be inspected when ordering. Special profiles will be quoted upon request.

Model	Connection Type	Taper Per Foot (TPF)	Threads Per Inch (TPI)
TP-RTC-8R	API 8-Round Casing, Tubing & Drill Pipe	¾”	8
TP-RTC-10R	API 10-Round Tubing	¾”	10
TP-5BTC75-INT	API Buttress Casing, Internal, 4½” - 13⅜”	¾”	5
TP-5BTC75-EXT	API Buttress Casing, External, 4½” - 13⅜”	¾”	5
TP-5BTC1-INT	API Buttress Casing, Internal, 16” - 20”	1”	5
TP-5BTC1-EXT	API Buttress Casing, External, 16” - 20”	1”	5
Line Pipe, NPT, and Specials are Available Upon Request			

Overlay Charts are also available. For information, contact Gagemaker directly. Specials are also available. For Special Overlays, please specify the following:

1. ***Screen Size***
2. ***Magnification 20X/50X***
3. ***Product Form or Profile Template***

Thread Lead Inspection

Gagemaker lead gages use interchangeable contact points to inspect both pin and box threads for a wide variety of API tubing & casing connections. Lead inspection is both an API mandated requirement and an industry wide practice. Defined as the distance between threads as measured on a plane parallel to the centerline of the threaded part, lead variation has a direct effect on stand-off, thread flank engagement, and make-up. Lead error is most commonly generated by manual and CNC lathes not cutting properly. Gagemaker lead gages provide dimensional verification of product print data.

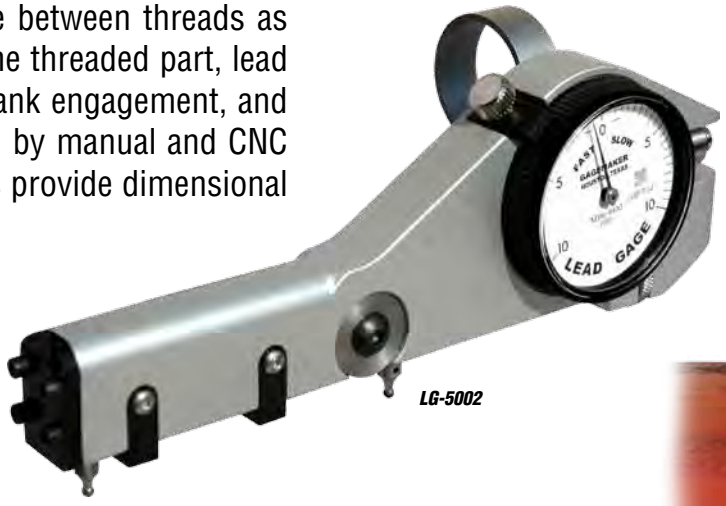

LG-5002

Lead Gages

The lead gage inspects both internal and external thread leads using contact points that seat in the threads of a part. The pitch of the thread determines the diameter of the contact points required for taking measurements.

The **LG-5002** is a two-point gage for inspecting thread lead on API threads. The two points allow for a sweeping action to obtain the measurement.

The **LG-5003** is a three-point gage for inspecting thread lead on API threads. Two fixed contact points at the rear of the gage and one moveable contact point at the front of the gage provide complete stability when taking thread lead measurements. This unique design does not require sweeping to obtain measurements.

Contact points can be easily changed to allow the gages to be used on a variety of thread forms. For tubing and casing, please see page 29 for contact points. Additional points can be found on pages 124-125.

Before inspecting parts, the lead gage must be preset to a nominal predetermined dimension using a lead gage setting standard. For tubing and casing, please see page 29 for standards.

More gage models and accessories can be found on pages 120-121. Higher resolution indicators are available.

Model	Description	Minimum Bore	Range
LG-5002	2-point Lead Gage	1.200	½" - 4" (12.7mm - 101.6mm) Thread Length
LG-5003	3-point Lead Gage	1.340	½" - 4" (12.7mm - 101.6mm) Thread Length

LG-5003

Lead Gage Setting Standard

Gagemaker's precision lead gage setting standards are manufactured in accordance with API Specification 5B. Lead gage standards are used to set the gage prior to the inspection.

Model	Connection Type/Description	TPF*	TPI*
LS-1001	API 8-Round Casing, Tubing & Drill Pipe, All 10-Round Tubing	¾"	8 & 10
LS-1005	API Buttress Casing, Internal/External 4½" - 13⅜"	¾"	5
LS-1006	API Buttress Casing, Internal/External 16" - Larger	1"	5

TPF = Taper Per Foot, TPI = Threads Per Inch

API Contact Points for Lead Gages

Gagemaker's standard ball contact points are manufactured with carbide balls. Both threaded and straight (non-threaded) shanks are available. All of Gagemaker's inspection gages use threaded shank contact points and are #4-48 UNF. Metric threads are available upon request. Lead gages require two or three contact points. Contact points are sold individually.

Model	Point Diameter	Threads Per Inch	Connection Type
T090	0.090"	5	Buttress Casing – Taper
T072	0.072"	8	API Tubing and Casing
T062	0.062"	5	Buttress Casing – Lead
T057	0.057"	10	API Tubing

Line Pipe and NPT contact points and standards are available.
For contact points,see pages 124-125. For standards, see page 121.

Crest Diameter and Ovality Inspection

Thirty years ago, Gagemaker introduced the **MRP** gage which forever changed the industry. Today, the **MRP** is the industry standard worldwide. Whether you call it Crest Diameter, Root Diameter, or Ball PD, Pitch Diameter governs the strength of the actual thread assembly and ensures API dimensional measurement specs are met.

The Gagemaker MRP gages measure the internal and external pitch diameters of tapered threaded connections. Any slight variations in diameter or ovality are immediately detected with these precision gages granting you total control over your quality. These versatile gages easily adjust to measure thread diameters ranging from 1½" - 20". The ability to inspect a range of diameters with one gage, eliminates the need for a room full of ring or plug gages.

MRP Crest Diameter and Ovality Gages

The **MRP** series of gages detects variations in crest diameter by the use of a gage shoe that rests on the crest of the threads. Variation in diameter is detected by the indicator readout. These gages must be set to a nominal size with one of a variety of setting standards or a MIC TRAC. Refer to the standard chart that follows. All of these gages are API approved for use on tubing and casing. ***Additional gages, parts, & accessories can be found on pages 104-109.***

Model	Description	Range
MRP-1000	Internal/External Crest Diameter Gage	Internal 1½" - 4½" External 1½" - 4½"
MRP-1001	External Crest Diameter Gage	External 1½" - 4½"
MRP-2001	External Crest Diameter Gage	External 2⅜" - 20"
MRP-2002	Internal Crest Diameter Gage	Internal 2⅜" - 20"
MRP-2003	Internal/External Crest Diameter Gage, 4¼" reach	Internal 2⅜" - 20" External 2⅜" - 20"

Rod Style Setting Standards for MRP-1000 and MRP-2000 Series

Rod style setting standards are designed to preset all models of the **MRP** Series gages for accurate inspection of API threaded connections. Each set of standards consists of two precision ground rods that are ground to lengths in accordance with API Specification 5B. Other standard styles and connections are available, see pages 108-109.

Thread Type	Connection	Pin Standard Model	Box Standard Model
NUE	2⅜" NUE	MRP-238NUE-P	MRP-238NUE-B
	2⅞" NUE	MRP-278NUE-P	MRP-278NUE-B
	3½" NUE	MRP-312NUE-P	MRP-312NUE-B
	4" NUE	MRP-4NUE-P	MRP-4NUE-B
	4½" NUE	MRP-412NUE-P	MRP-412NUE-B
EUE	2⅜" EUE	MRP-238EUE-P	MRP-238EUE-B
	2⅞" EUE	MRP-278EUE-P	MRP-278EUE-B
	3½" EUE	MRP-312EUE-P	MRP-312EUE-B
	4" EUE	MRP-4EUE-P	MRP-4EUE-B
	4½" EUE	MRP-412EUE-P	MRP-412EUE-B

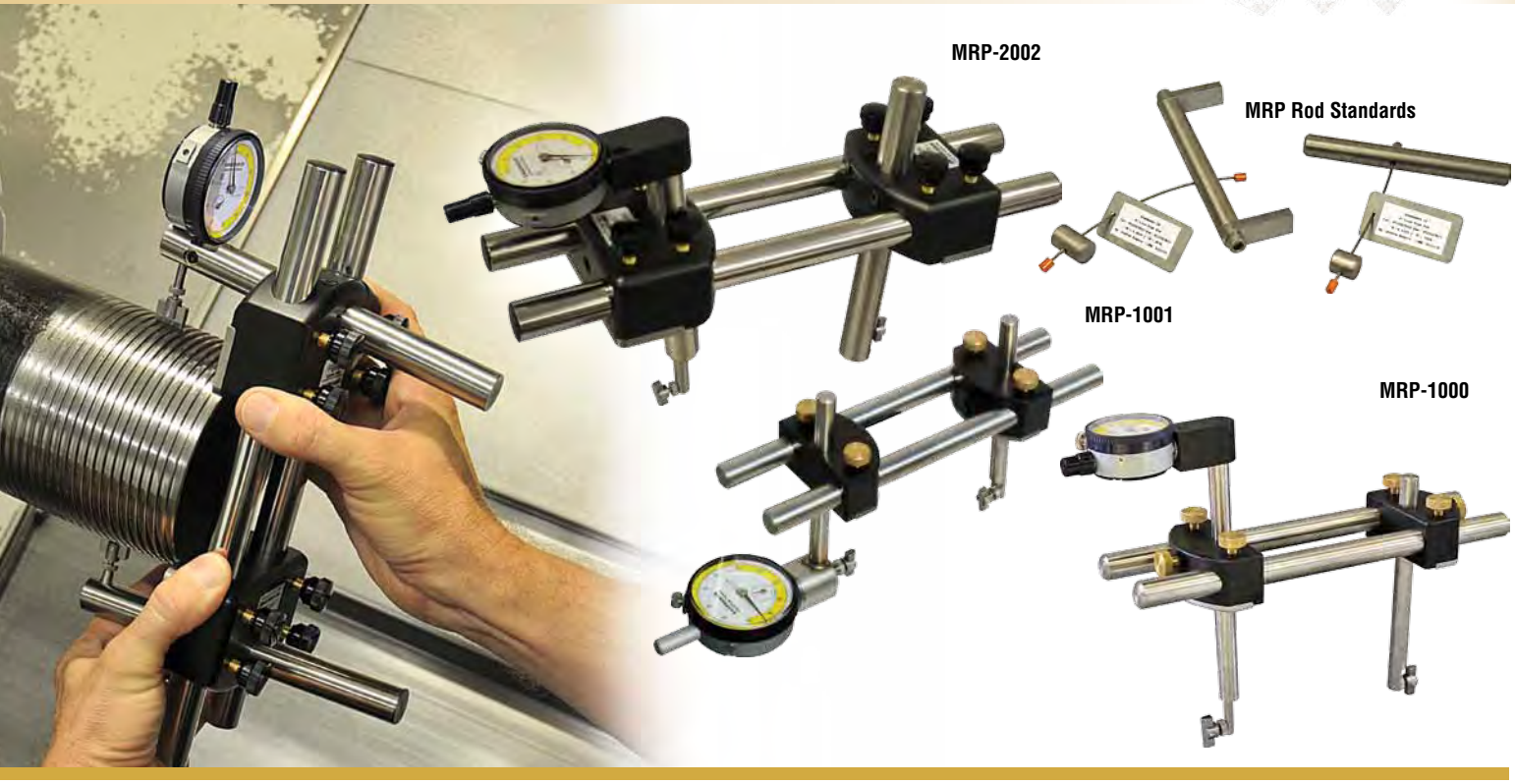

Rod Style Setting Standards (Cont'd.)

Thread Type	Connection	Pin Standard	Box Standard
Buttress	4½" Buttress	MRP-412B-P	MRP-412B-B
	5" Buttress	MRP-5B-P	MRP-5B-B
	5½" Buttress	MRP-512B-P	MRP-512B-B
	6⅝" Buttress	MRP-658B-P	MRP-658B-B
	7" Buttress	MRP-7B-P	MRP-7B-B
	7⅝" Buttress	MRP-758B-P	MRP-758B-B
	8⅝" Buttress	MRP-858B-P	MRP-858B-B
	9⅝" Buttress	MRP-958B-P	MRP-958B-B
	10¾" Buttress	MRP-1034B-P	MRP-1034B-B
	11¾" Buttress	MRP-1134B-P	MRP-1134B-B
	13⅜" Buttress	MRP-1338B-P	MRP-1338B-B
	16" Buttress	MRP-16B-P	MRP-16B-B
	18⅝" Buttress	MRP-1858B-P	MRP-1858B-B
	20" Buttress	MRP-20B-P	MRP-20B-B
LTC	4½" 8R LTC	MRP-412L-P	MRP-412L-B
	5" 8R LTC	MRP-5L-P	MRP-5L-B
	5½" 8R LTC	MRP-512L-P	MRP-512L-B
	6⅝" 8R LTC	MRP-658L-P	MRP-658L-B
	7" 8R LTC	MRP-7L-P	MRP-7L-B
	7⅝" 8R LTC	MRP-758L-P	MRP-758L-B
	8⅝" 8R LTC	MRP-858L-P	MRP-858L-B
	9⅝" 8R LTC	MRP-958L-P	MRP-958L-B>P110 or MRP-958L-B<P110
	20" 8R LTC	MRP-20L-P	MRP-20L-B>JK55 or MRP20L-B<JK55

Thread Type	Connection	Pin Standard	Box Standard
STC	4½" - 9.50# 8R STC	MRP-412S-9-P	MRP-412S-9-B
	4½" - Other 8R STC	MRP-412S-O-P	MRP-412S-O-B
	5" - 11.50# 8R STC	MRP-5S-11-P	MRP-5S-11-B
	5" - Other 8R STC	MRP-5S-O-P	MRP-5S-O-B
	5½" 8R STC	MRP-512S-P	MRP-512S-B
	6⅝" 8R STC	MRP-658S-P	MRP-658S-B
	7" - 17.00# 8R STC	MRP-7S-17-P	MRP-7S-17-B
	7" - Other 8R STC	MRP-7S-O-P	MRP-7S-O-B
	7⅝" 8R STC	MRP-758S-P	MRP-758S-B
	8⅝" - 24.00# 8R STC	MRP-858S-24-P	MRP-858S-24-B
	8⅝" - Other 8R STC	MRP-858S-O-P	MRP-858S-O-B
	9⅝" 8R STC	MRP-958S-P	MRP-958S-B>P110 or MRP-958S-B<P110
	10¾" - 32.75# 8R STC	MRP-1034S-32-P	MRP-1034S-32-B
	10¾" - Other 8R STC	MRP-1034S-O-P	MRP-1034S-O-B>P110 or MRP-1034S-O-B<P110
	11¾" 8R STC	MRP-1134S-P	MRP-1134S-B>P110 or MRP-1134S-B<P110
	13⅜" 8R STC	MRP-1338S-P	MRP-1338S-B>P110 or MRP-1338S-B<P110
	16" 8R STC	MRP-16S-P	MRP-16S-B
	18⅝" 8R STC	MRP-1858S-P	MRP-1858S-B
	20" 8R STC	MRP-20S-P	MRP-20S-B>JK55 or MRP20S-B<JK55

Line Pipe, NPT, step style, and frame style standards are available.
All Special Orders, Non-Standard API Standards, or Premium Connection Setting Standards are extra.

Thread Taper Inspection

Tapered threads are a signature feature of API Tubing & Casing connections. Measuring thread taper is not only an industry wide practice, it is an API Specification 5B mandated inspection. During the manufacturing process, taper must be accurately measured and quantified to stay within the required specification limits. When subjected to a service load, taper error on threaded tubing and casing connections can lead to galling, improper fit, and reduced performance.

For the most accurate taper inspection, use Gagemaker taper gages to verify both the threaded pin and coupling meet all customer and industry requirements. Gagemaker's taper gages are the best choice for measuring and controlling both pin and box taper values.

External Taper Gages

Gagemaker's external taper gages inspect variation in external thread taper. Unless specified otherwise, external taper gages are shipped with .072" diameter contact points (T072) as standard. Refer to the chart on the following page for the proper contact point for your particular connection. Each gage requires two contact points. Higher resolution indicators are available.

Model	Description	Range	Travel	Resolution
ET-7001	External Taper, ½" travel	0" - 6"	½"	.001"
ET-7002	External Taper, ½" travel	0" - 10"	½"	.001"
ET-7003	External Taper, 1" travel	0" - 10"	½"	.001"
ET-7004	External Taper, ½" travel	0" - 16"	½"	.001"
ET-7006	External Taper, ½" travel	16" - 24"	½"	.001"

Internal Taper Gages

Gagemaker's internal taper gages measure variation in thread taper. Taper gages are shipped with our standard set of .072" diameter contact points (T072), unless specified otherwise or requested. Refer to the chart on the following page for the proper contact point for your particular connection. Each internal gage requires two contact points. Higher resolution indicators are available.

Model	Description	Range	Travel	Resolution
IT-6000	Internal Taper Gage	4¼" Depth, 1½" - 9" Diameter	1"	.001"
IT-6001	Internal Taper Gage	Any Depth, 5" - 13⅜" API Sizes	½"	..001"

API Contact Points for Taper Gages

Gagemaker's standard ball contact points are manufactured with carbide balls. All of Gagemaker's inspection gages use threaded shank contact points. Threaded shanks are #4-48 UNF. Metric threads are available upon request. Taper gages require two contact points. Additional contact points can be found on pages 124-125.

Model	Point Diameter	Threads Per Inch (TPI)	Connection Type
T090	0.090"	5	Buttress Casing – Taper
T072	0.072"	8	API Tubing and Casing
T057	0.057"	10	API Tubing and Line Pipe

Thread Height Inspection

Proper Thread Height maximizes the performance of the connection. Thread height inspection is an API requirement. Gagemaker thread height gages inspect external or internal thread height for a variety of thread forms. A shallow thread height may allow the connection to pull apart under stress.

TH-3002R

TH-3006

External Thread Height Gages

Gagemaker manufactures many models of external thread height gages. Specify the type of thread when ordering. One contact point based on thread type is included, please refer to the chart on page 35. For tubing and casing, standards may be required, please see page 35 for more.

Model	Description	Connection	Travel	Min. Bore
TH-3002B	External Thread Height, 0-25-0	¾" TPF Buttress	.094"	2.930"
TH-3002R	External Thread Height, 0-50-0	8-Round & 10-Round	.162"	3.400"
TH-3002S	External Thread Height, 0-50-0	8-Round	.196"	3.230"

Internal Thread Height Gages

Gagemaker also manufactures several models of internal thread height gages. Please specify the type of thread when ordering. One contact point based on thread type is included, please refer to the chart on page 35. For tubing and casing, standards may be required, please see page 35 for more.

Model	Description	Connection	Travel	Min. Bore
TH-3006	Internal Thread Height, 0-25-0	8-Round & 10-Round	.105"	1.595"
TH-3008	Internal Thread Height, 0-25-0	8-Round & 10-Round	.094"	1.575"
TH-3009	Internal Thread Height, 0-25-0	¾" TPF Buttress	.250"	1.750"

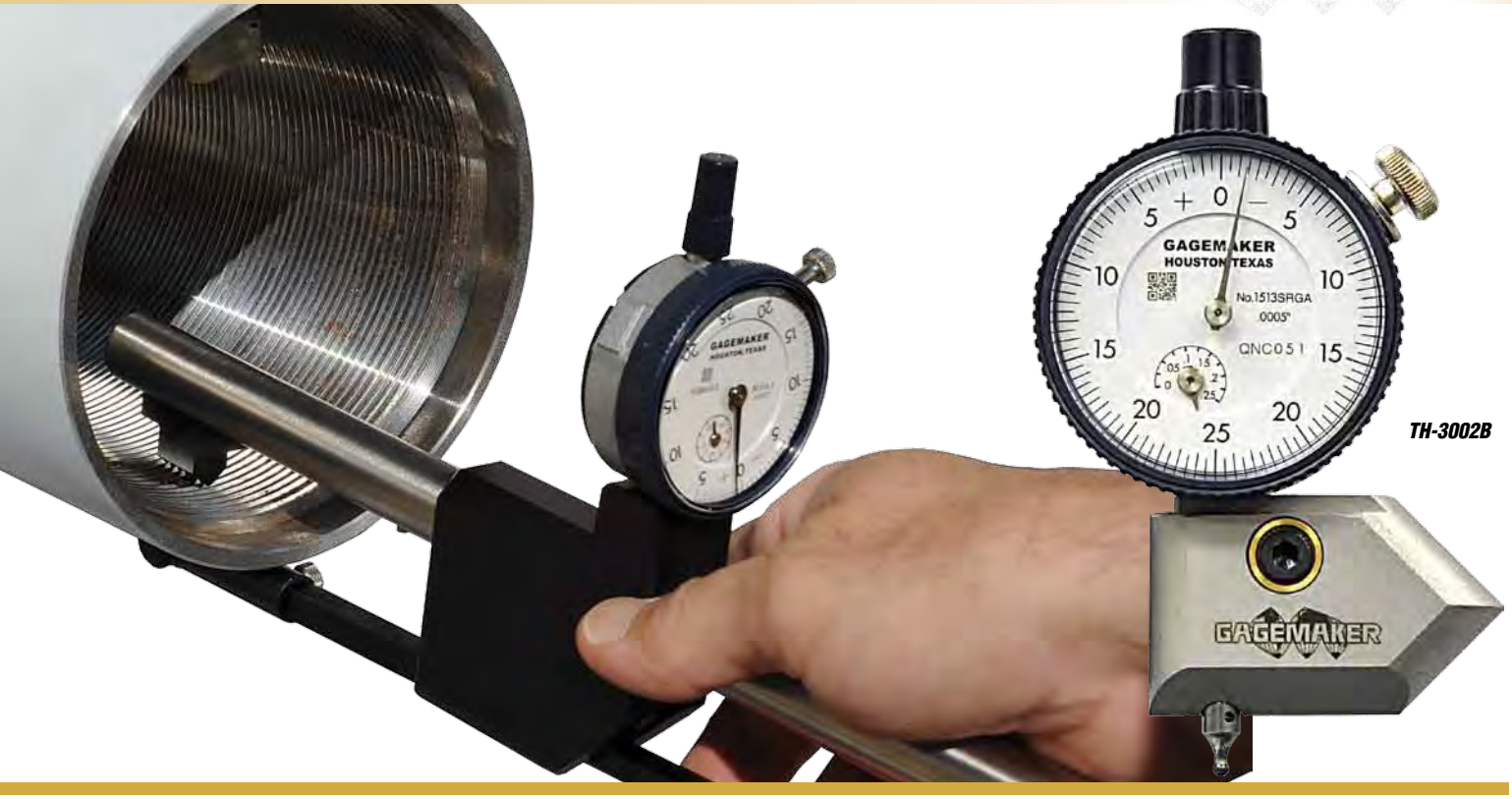

TH-3002B

Thread Height Gage Standards

Gagemaker manufactures API mandated precision setting standards for presetting thread height gages. Please specify the type of thread when ordering.

Model	Description
1014	8 & 10 Round Threads
1014S	8 & 10 Round Threads (Crest to Pitchline "Shave/Addendum")
1017	13⅜" & Smaller Buttress, ¾" TPF
1018	16" & Larger Buttress, 1"TPF

Thread Height Gage Contact Points

The contact points are interchangeable between gages. Contact point diameters are manufactured to tolerances of +.0002". Thread height gages require one contact point. Additional points are available, please see pages 123-124.

Model	Description
T072	0.072" Contact Point for Buttress Threads
T501	50° Cone Contact Point, Self-Centering for TH-3001R, TH-3002R Gages
T502	Self-Centering Sleeve for T501 & T503 Contact Points
T503	50° Cone Contact Point, "V" Threads for TH-3006